Product data sheet

Amsterdam

duraplus

HS-E0400F-25/431N-AS/422

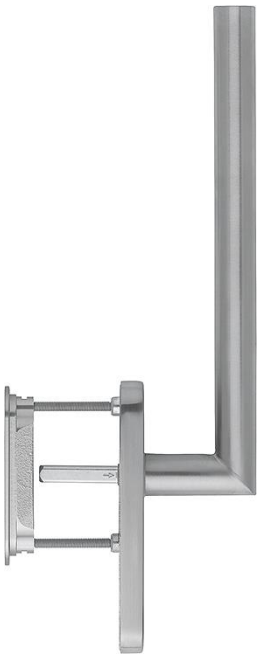

Article number	11622209
EAN-Code	4012789698190
Country of origin	Germany
CN-Code	83024150
Material	stainless steel
Door thickness	75-80 mm
Spindle size	10 mm
Spindle length	
(Key)Hole size	blank
Key hole distance	
Stop position in °	180°
Screws	M6x85 mm + M6x90 mm
Finish	F31-1/F69 alu matt stainless steel effect/satin s/s
Range	Core Product Range
Packing unit	1
Outer carton	4

HOPPE stainless steel lift/slide handle set for patio doors, exterior with recessed pull:

- Bearing: fixed/movable handle
- Stop-in position: 180°
- Cover: full cover cap
- Base: outside: none, inside: zamak, supporting lugs
- Spindle: loose HOPPE solid spindle with radiused edges
- Fixing: concealed, bolt-through, M6 thread screws

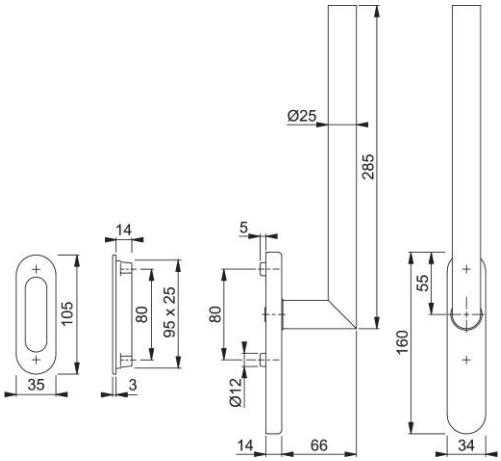

© HOPPE AG, All rights reserved. 12/4/2025