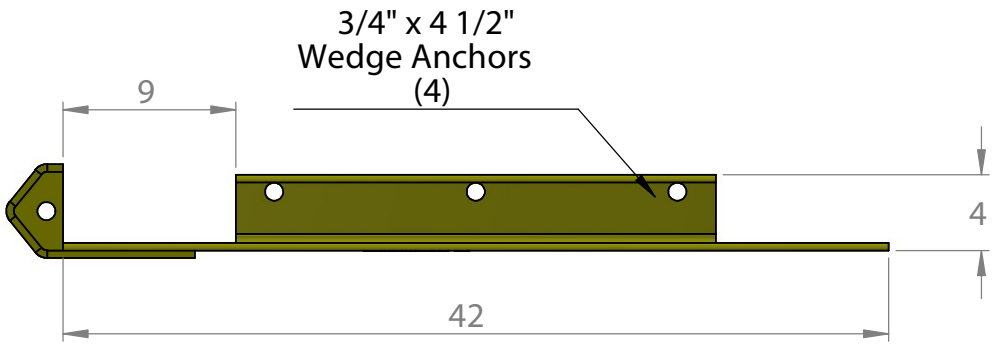

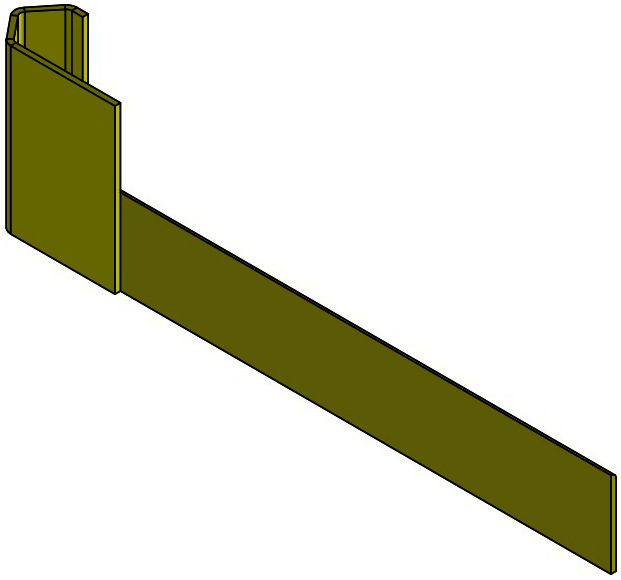

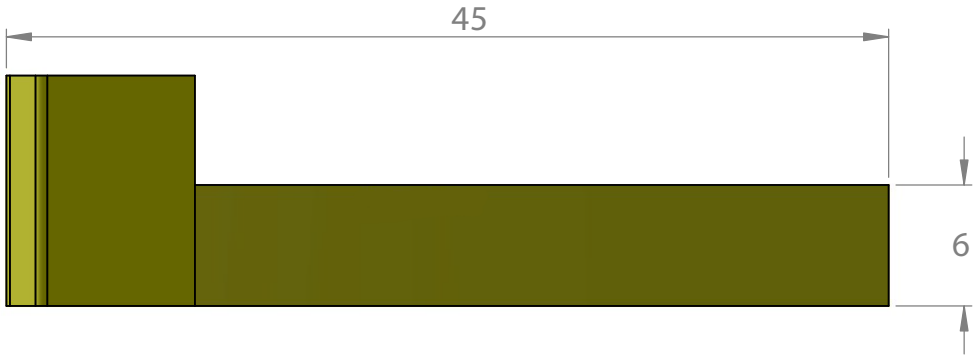

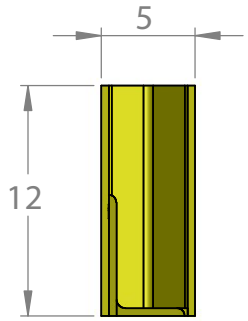

GORILLA GUARDS

TITLE:

42" Inside Rack Protector Left

SIZE	DWG. NO.	REV
A	IRP-42LH-HD	A

SCALE: NTS | WEIGHT: 60 LBS | SHEET 1 OF 1

5 4 3 2 1