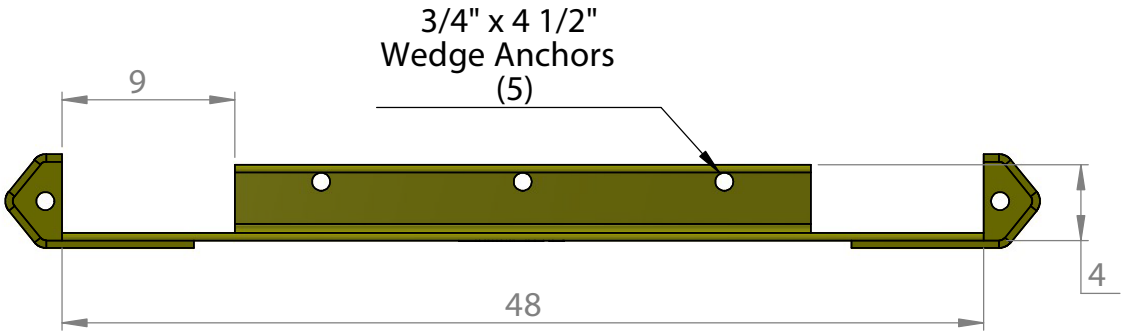

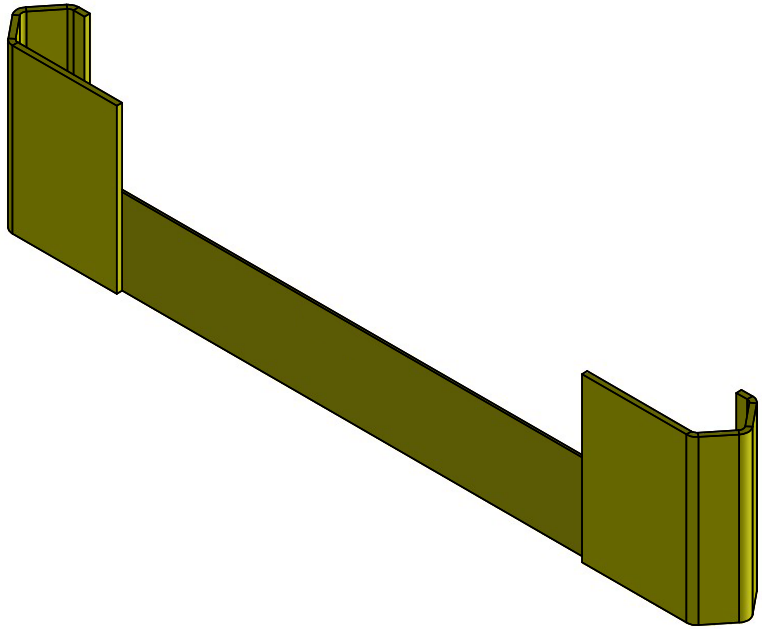

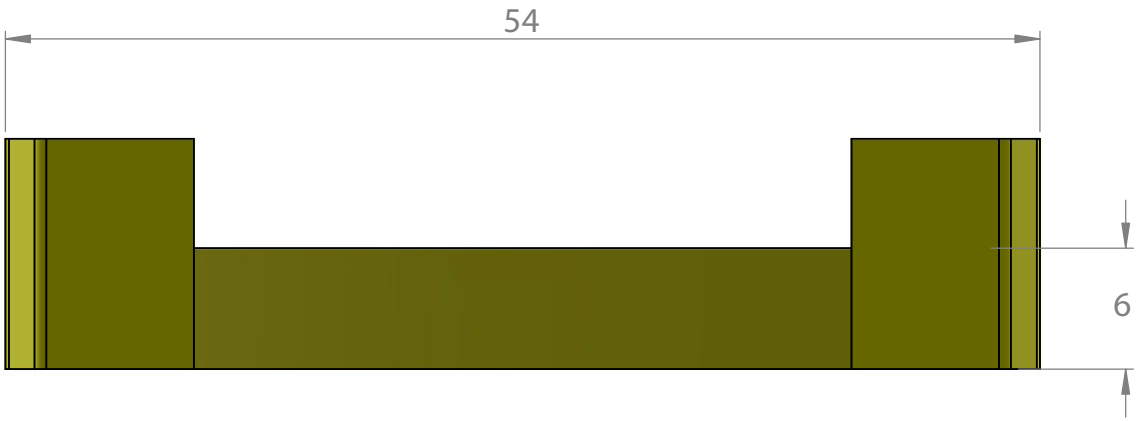

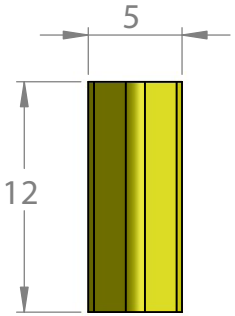

GORILLA GUARDS

TITLE:

48" Inside Rack Protector

SIZE	DWG. NO.	REV
A	IRP-48-HD	A

SCALE: NTS | WEIGHT: 86 LBS | SHEET 1 OF 1

5 4 3 2 1