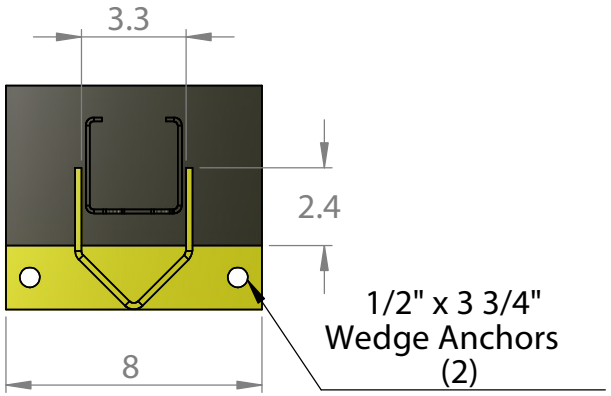

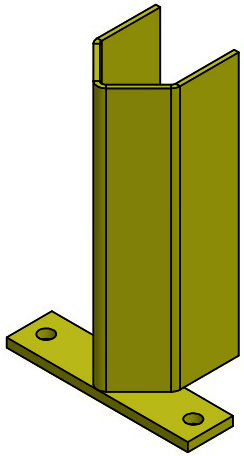

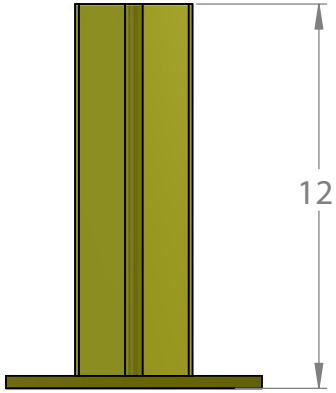

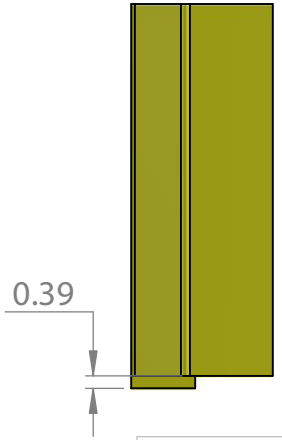

GORILLA GUARDS

TITLE:

12" Universal Post Protector

SIZE	DWG. NO.	REV
A	P12-3R	A

SCALE: NTS | WEIGHT: 9.5 LBS | SHEET 1 OF 1

5 4 3 2 1