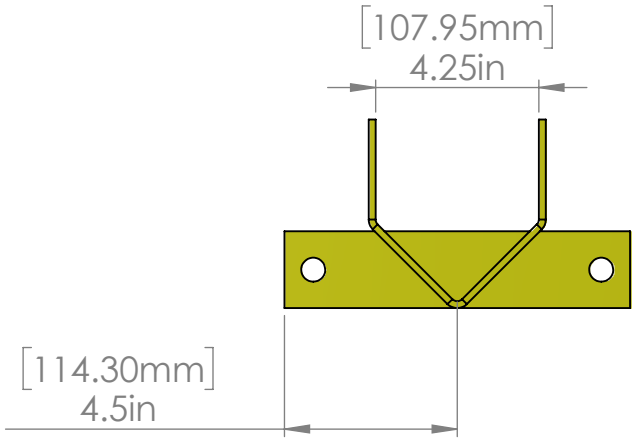

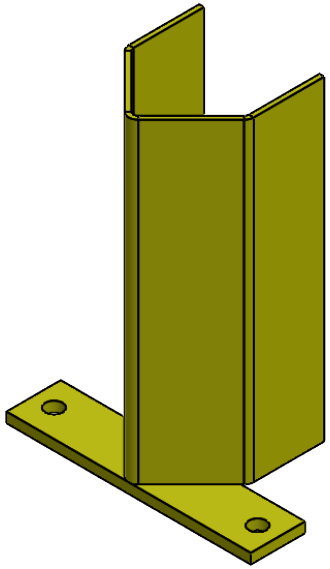

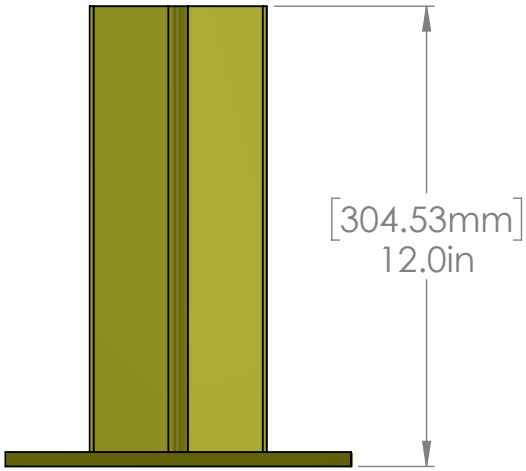

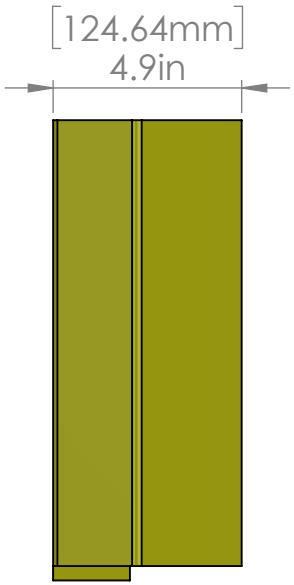

GORILLA GUARDS

TITLE: 4" Raised Post Protector 12" Height		
SIZE A	DWG. NO. P12-4R	REV A
SCALE: NTS	WEIGHT: 8.7 LBS	SHEET 1 OF 1

5 4 3 2 1