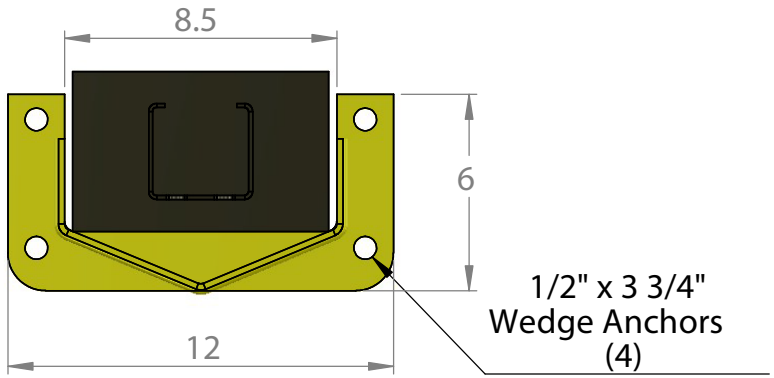

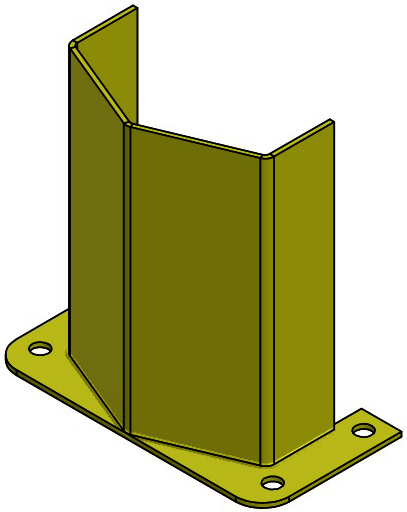

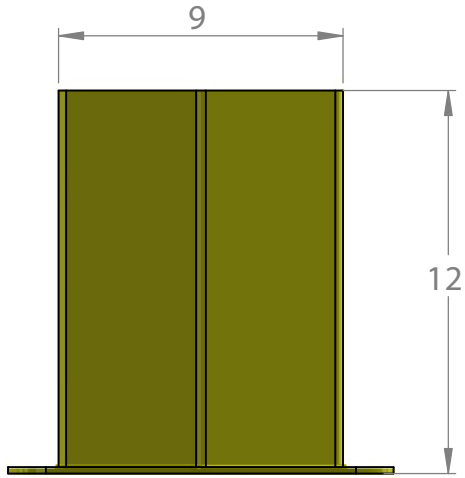

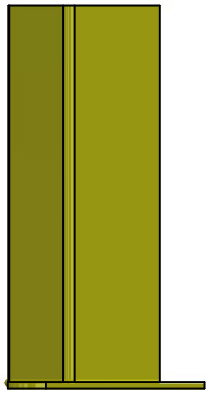

GORILLA GUARDS

TITLE: 12" Post Protector 8" Wide		
SIZE A	DWG. NO. P12-8	REV A
SCALE: NTS	WEIGHT: 11.9 LBS	SHEET 1 OF 1

5 4 3 2 1