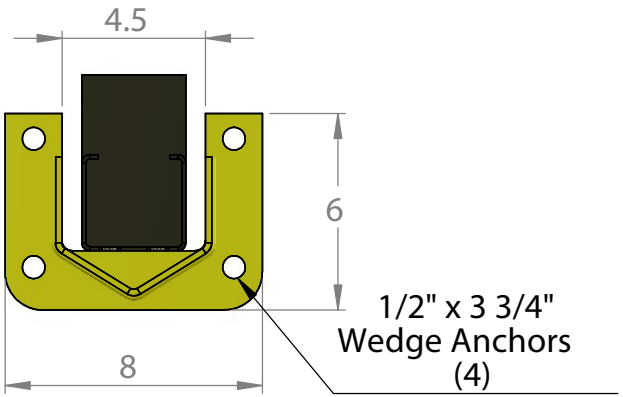


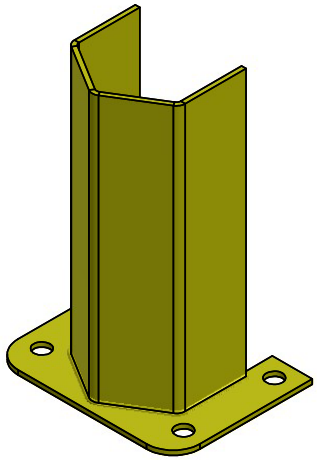

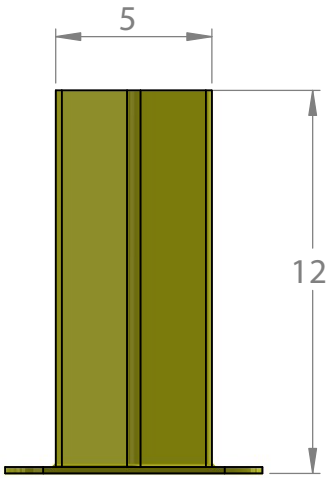


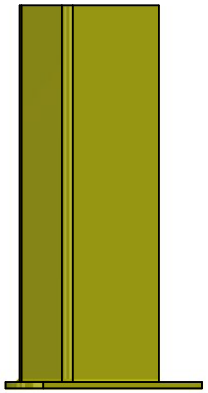

GORILLA GUARDS

TITLE: 12" Post Protector

| SIZE | DWG. NO. | REV |
|---|---|---|
| A | P12 | A |

SCALE: NTS | WEIGHT: 9.6 LBS | SHEET 1 OF 1

5 4 3 2 1