STATUS:
MM 02/06/2025 - RELEASED ON ECO: 500030380

TECH-001341

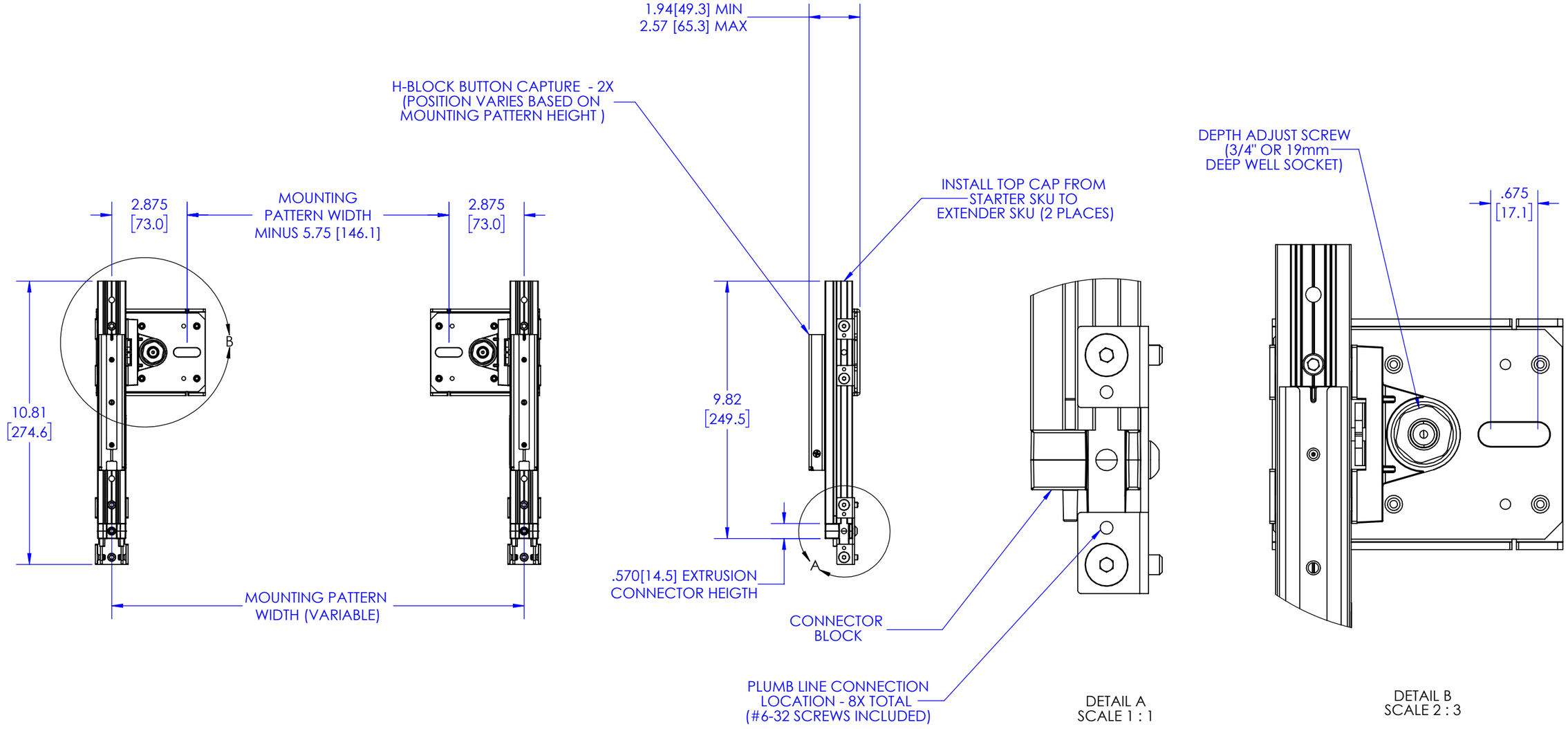

DVM EXTENDER SKUS MUST ALWAYS BE USED WITH A STARTER SKU

THE INFORMATION AND DESIGNS CONTAINED IN THIS DRAWING ARE CONFIDENTIAL AND THE PROPRIETARY PROPERTY OF LEGRAND | AV. NEITHER THIS DESIGN NOR ANY INFORMATION CONTAINED IN THIS DRAWING MAY BE REPRODUCED OR DISCLOSED TO OTHERS WITHOUT THE EXPRESS WRITTEN CONSENT OF LEGRAND | AV.

CAD GENERATED DRAWING, DO NOT MANUALLY UPDATE.

DRAWN BY	MM	1/14/2025
ENG APPROVAL		
MFG APPROVAL		
QA APPROVAL		

CHIEF
6436 CITY WEST PKWY
EDEN PRAIRIE MN, 55344
PHONE: 866-977-3901
FAX: 877-894-6918

DESCRIPTION
TiLED UNIVERSAL 250MM 1-HIGH EXTENDER, TECH

MODEL NO.
DVM0250U1E

SHEET 1 OF 1	SCALE	SIZE	DWG. NO.	REV.
	1:4	B	TECH-001341	00