Copyright © 1994, 2009, 2021, ASSA ABLOY Accessories and Door Controls Group, Inc. All rights reserved.
Reproduction in whole or in part without the express written permission of ASSA ABLOY Accessories and Door Controls Group, Inc. is prohibited.



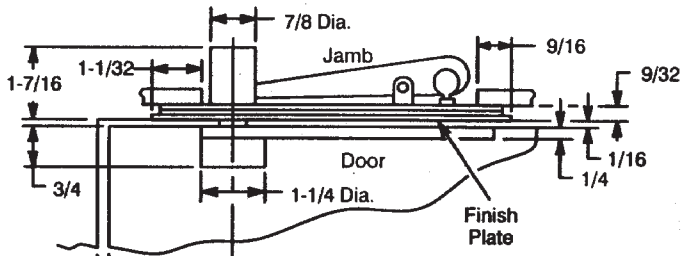


TOP PIVOT

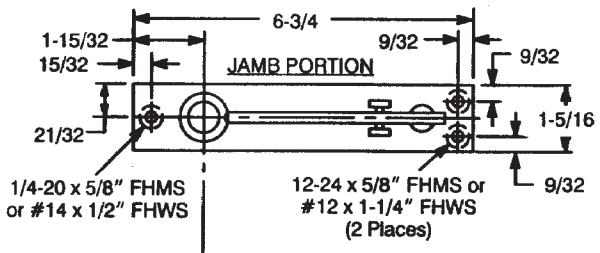


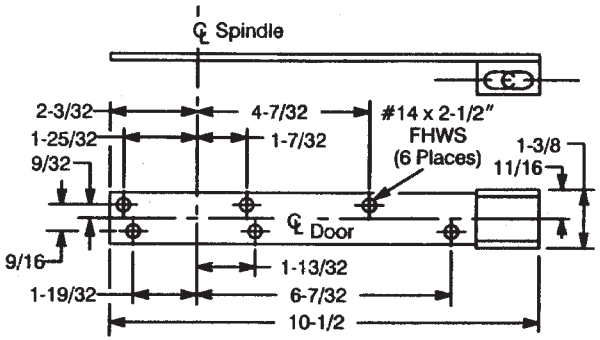


WOOD DOOR ARM PLATE

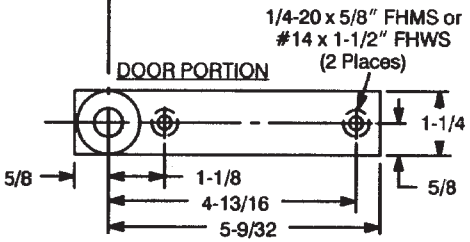


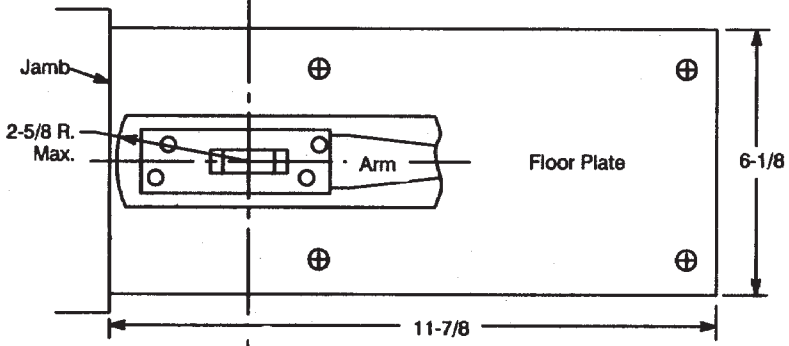


**Notes:**

1. Do not scale drawing.
2. Suitable reinforcing by others.
3. Norton Rixson design threshold available on request.
4. Tighten adjusting screw to notched "V" line on arm to acquire standard initial location of door. Screw moves door towards and away from jamb to equalize door clearances.
5. All dimensions given in inches.

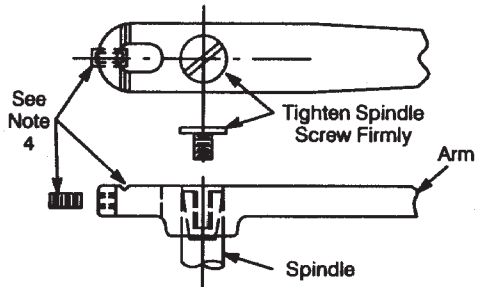


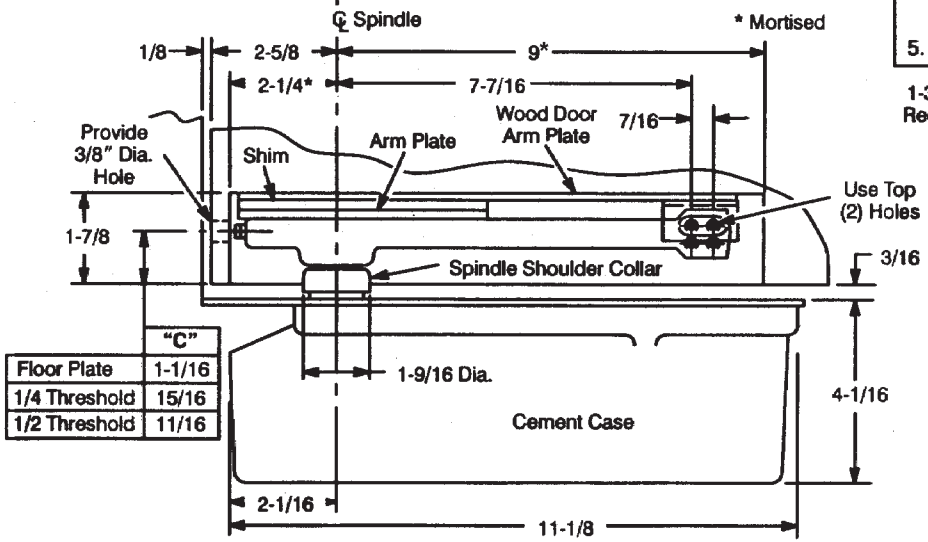


| | "C" |
|---|---|
| Floor Plate | 1-1/16 |
| 1/4 Threshold | 15/16 |
| 1/2 Threshold | 11/16 |

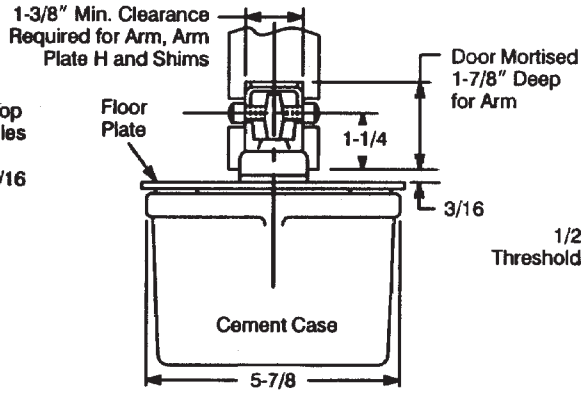


WITH FLOOR PLATE
Set Cement Case 1/8" Below Surface of Finished Floor

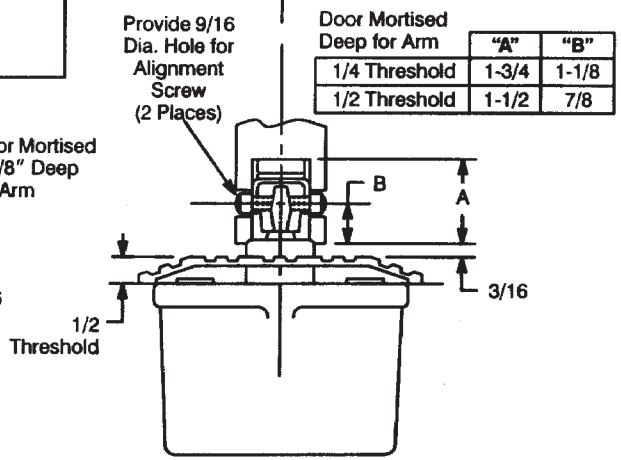


Door Mortised Deep for Arm

| | "A" | "B" |
|---|---|---|
| 1/4 Threshold | 1-3/4 | 1-1/8 |
| 1/2 Threshold | 1-1/2 | 7/8 |

WITH THRESHOLD
Set Cement Case Flush with Finished Floor

# W26 and W28 Floor Closers
# Single Acting, Center Hung
# For Wood Door

NORTON RIXSON
ASSA ABLOY

| TEMPLATE NUMBER | REV | DATE |
|---|---|---|
| CH20205 | 3 | 12/21 |

Approved 2023-12-15